Product data sheet

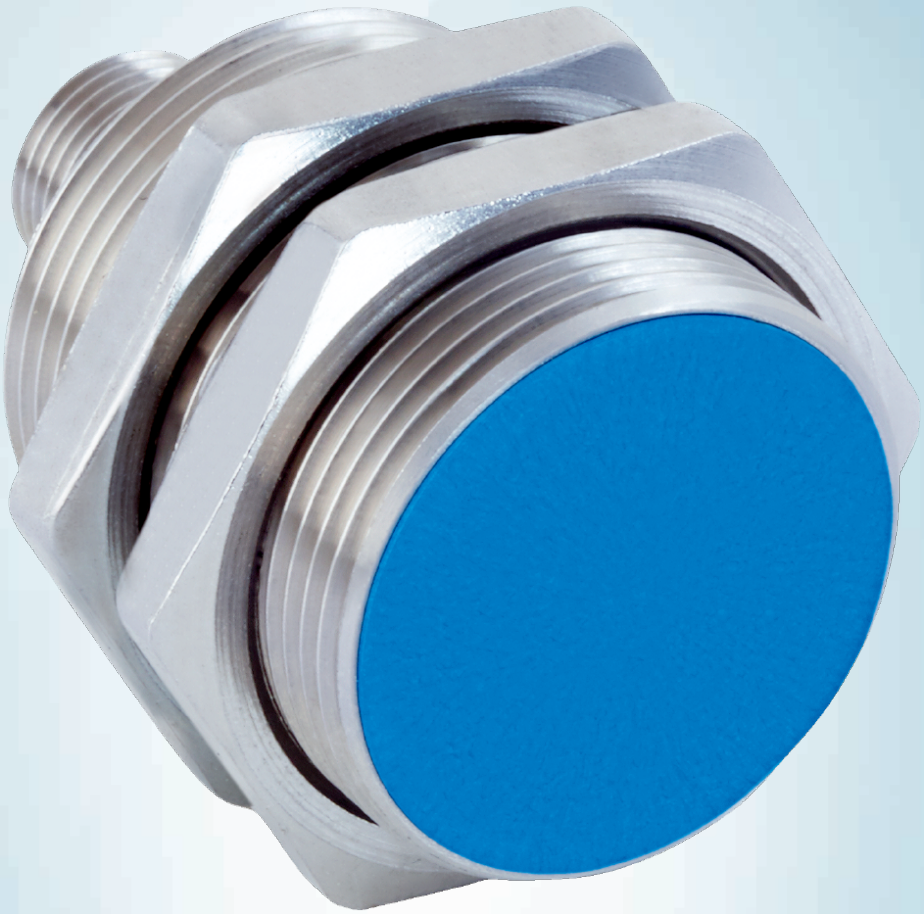

IMG30-15BNOZC0K

IMG

INDUCTIVE PROXIMITY SENSORS

SICK
Sensor Intelligence.

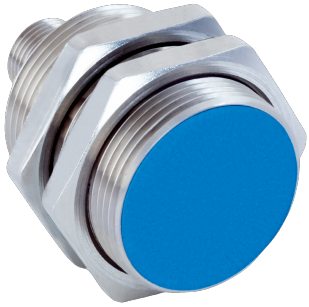

Illustration may differ

Ordering information

Type	Part no.
IMG30-15BNOZC0K	1135650

Included in delivery: BEF-MU-M30 (1)

Other models and accessories → www.sick.com/IMG

Detailed technical data

Features

Housing	Metric
Housing	Short-body
Thread size	M30 x 1.5
Diameter	Ø 30 mm
Sensing range S_n	15 mm
Safe sensing range S_a	12.15 mm
Installation type	Flush
Switching frequency	500 Hz
Connection type	Male connector M12, 4-pin
Switching output	NPN
Output function	NC
Electrical wiring	DC 3-wire
Enclosure rating	IP67 [1)] IP68 [1)] IP69K [2)]
Special features	Resistant against coolant lubricants, Temperature resistance
Special applications	Zones with coolants and lubricants, Mobile machines, Difficult application conditions
Items supplied	Mounting nut, brass, nickel-plated (2x)

[1)] According to EN 60529.
[2)] According to ISO 20653:2013-03.

Mechanics/electronics

Supply voltage	10 V DC ... 30 V DC

[1)] At I_a max.
[2)] Supply voltage U_B and constant ambient temperature Ta.
[3)] Of Sr.

Ripple	≤ 10 %
Voltage drop	≤ 2 V [1]
Time delay before availability	≤ 100 ms
Hysteresis	3 % ... 20 %
Reproducibility	≤ 2 % [2] [3]
Temperature drift (of S_r)	± 10 %
EMC	According to EN 60947-5-2
Environmental test	Quick temperature change EN 60068-2-14, Na: TA = –25 °C, TB = 75 °C, t1 = 40 min, t2 = < 10 s, 300 cycles
Corrosion test	Salt spray test EN 60068-2-52: severity 5, 4 cycles
Continuous current I_a	≤ 200 mA
No load current	≤ 10 mA
Short-circuit protection	✓
Power-up pulse protection	✓
Shock and vibration resistance	Vibration resistance acc. to EN 60068-2-6 Fc: 60 g peak (10 Hz ... 2,000 Hz) Long-term shock resistance acc. to EN 60068-2-27 Ea: 100 g 2 ms sinusoidal; 500 shocks in each direction of the 3 coordinate axes Broadband noise acc. to EN 60068-2-64: 15 g rms (5 Hz ... 2,000 Hz) / 8 hours in each direction of the 3 coordinate axes
Indication	
LED yellow	Switching status Permanently on: Switching output active
Ambient operating temperature	–40 °C ... +85 °C
Housing material	Nickel-plated brass
Sensing face material	Plastic, LCP
Housing length	50.7 mm
Thread length	32.7 mm
Tightening torque, max.	≤ 70 Nm
Protection class	III
UL File No.	E181493

[1] At I_a max.

[2] Supply voltage U_B and constant ambient temperature Ta.

[3] Of Sr.

Safety-related parameters

$MTTF_D$	1,820 years
DC_{avg}	0 %
T_M (mission time)	20 years

Reduction factors

Note	The values are reference values which may vary
St37 steel (Fe)	1
Stainless steel (V2A, 304)	Approx. 0.72
Aluminum (Al)	Approx. 0.37
Copper (Cu)	Approx. 0.29

Brass (Br)	Approx. 0.39

Installation note

Remark	Associated graphic see "Installation"
B	40 mm
C	30 mm
D	45 mm
F	120 mm

Classifications

ECLASS 5.0	27270101
ECLASS 5.1.4	27270101
ECLASS 6.0	27270101
ECLASS 6.2	27270101
ECLASS 7.0	27270101
ECLASS 8.0	27270101
ECLASS 8.1	27270101
ECLASS 9.0	27270101
ECLASS 10.0	27270101
ECLASS 11.0	27270101
ECLASS 12.0	27274001
ETIM 5.0	EC002714
ETIM 6.0	EC002714
ETIM 7.0	EC002714
ETIM 8.0	EC002714
UNSPSC 16.0901	39122230

Installation note

Flush installation

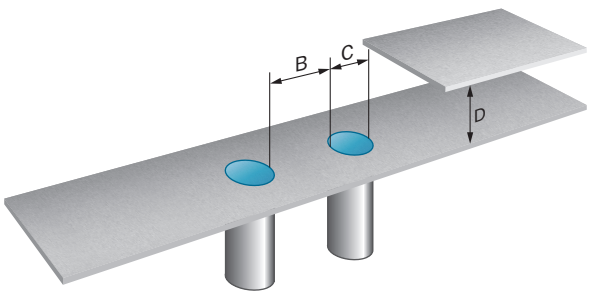

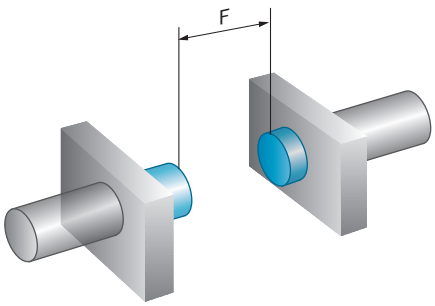

Connection diagram

Cd-008

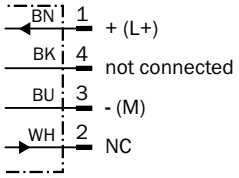

Response diagram

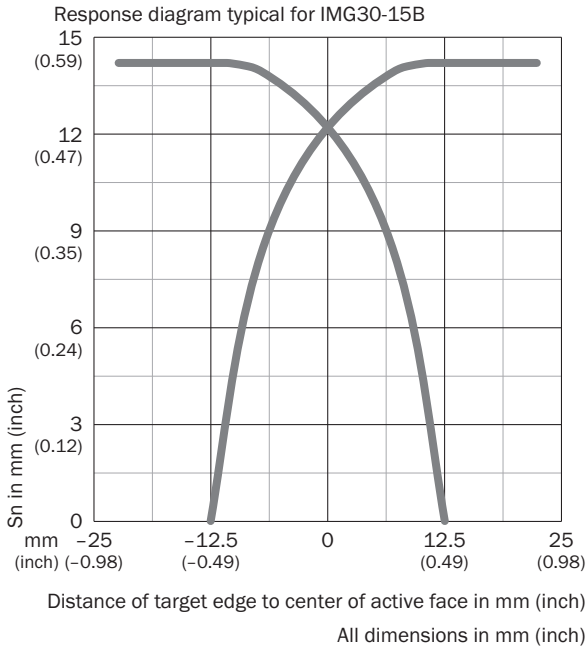

Functional principle

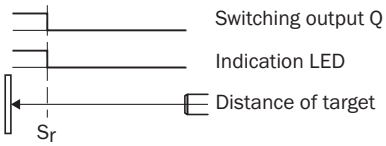

Dimensional drawing (Dimensions in mm (inch))

IMG30, short variant, male connector, flush

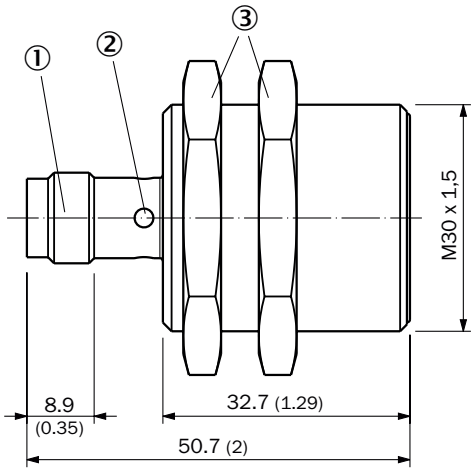

① Connection
② Display LED
③ Fastening nuts (2x); AF36; nickel-plated brass

Recommended accessories

Other models and accessories ➜ www.sick.com/IMG

	Brief description	Type	Part no.
Mounting brackets and plates			
	Mounting plate for M30 sensors, steel, zinc coated, without mounting hardware	BEF-WG-M30	5321871
	Mounting bracket for M30 sensors, steel, zinc coated, without mounting hardware	BEF-WN-M30	5308445
Others			
	• **Connection type head A:** Female connector, M12, 4-pin, straight, A-coded • **Connection type head B:** Flying leads • **Signal type:** Sensor/actuator cable • **Cable:** 2 m, 4-wire, PUR, halogen-free • **Description:** Sensor/actuator cable, unshielded • **Application:** Zones with oils and lubricants, Drag chain operation, Robot	YF2A14-020UB3XLEAX	2095607
	• **Connection type head A:** Female connector, M12, 4-pin, angled, A-coded • **Connection type head B:** Flying leads • **Signal type:** Sensor/actuator cable • **Cable:** 2 m, 4-wire, PUR, halogen-free • **Description:** Sensor/actuator cable, unshielded • **Application:** Zones with oils and lubricants, Drag chain operation, Robot	YG2A14-020UB3XLEAX	2095766
	• **Connection type head A:** Female connector, M12, 4-pin, straight, A-coded • **Connection type head B:** Flying leads • **Signal type:** Sensor/actuator cable • **Cable:** 2 m, 4-wire, PVC • **Description:** Sensor/actuator cable, unshielded • **Application:** Zones with chemicals	YF2A14-020VB3XLEAX	2096234

	Brief description	Type	Part no.
	• **Connection type head A:** Female connector, M12, 4-pin, angled, A-coded • **Connection type head B:** Flying leads • **Signal type:** Sensor/actuator cable • **Cable:** 2 m, 4-wire, PVC • **Description:** Sensor/actuator cable, unshielded • **Application:** Zones with chemicals	YG2A14-020VB3XLEAX	2095895

SICK AT A GLANCE

SICK is one of the leading manufacturers of intelligent sensors and sensor solutions for industrial applications. A unique range of products and services creates the perfect basis for controlling processes securely and efficiently, protecting individuals from accidents and preventing damage to the environment.

We have extensive experience in a wide range of industries and understand their processes and requirements. With intelligent sensors, we can deliver exactly what our customers need. In application centers in Europe, Asia and North America, system solutions are tested and optimized in accordance with customer specifications. All this makes us a reliable supplier and development partner.

Comprehensive services complete our offering: SICK LifeTime Services provide support throughout the machine life cycle and ensure safety and productivity.

For us, that is "Sensor Intelligence."

WORLDWIDE PRESENCE:

Contacts and other locations –www.sick.com

SICK
Sensor Intelligence.